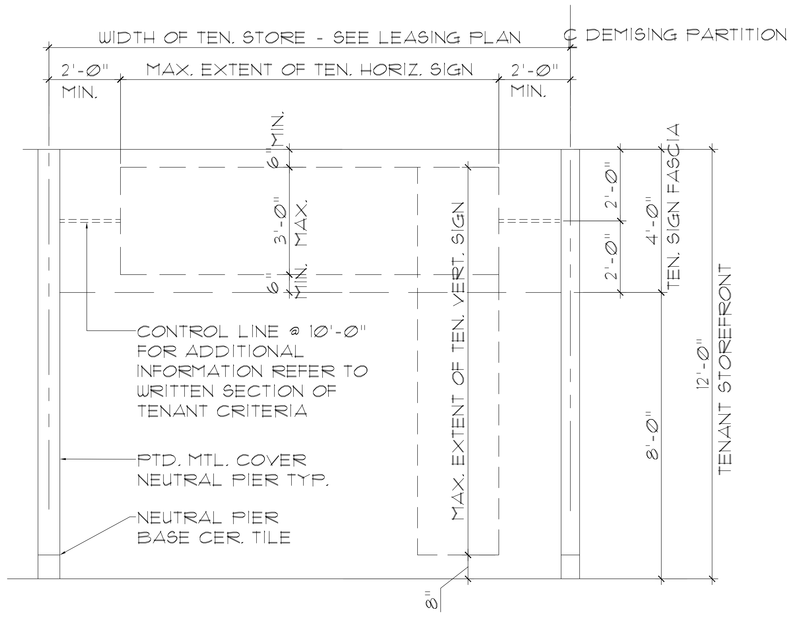


E TD-3R TYPICAL STOREFRONT ELEVATION
SCALE: 1½" = 1'-0"

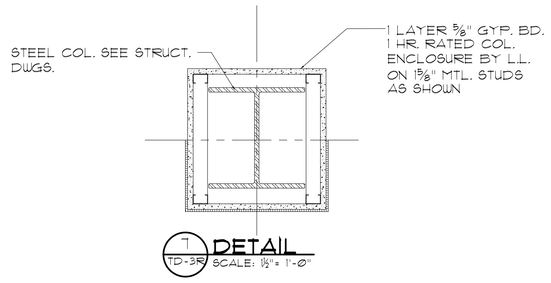


7 TD-3R DETAIL
SCALE: 1½" = 1'-0"

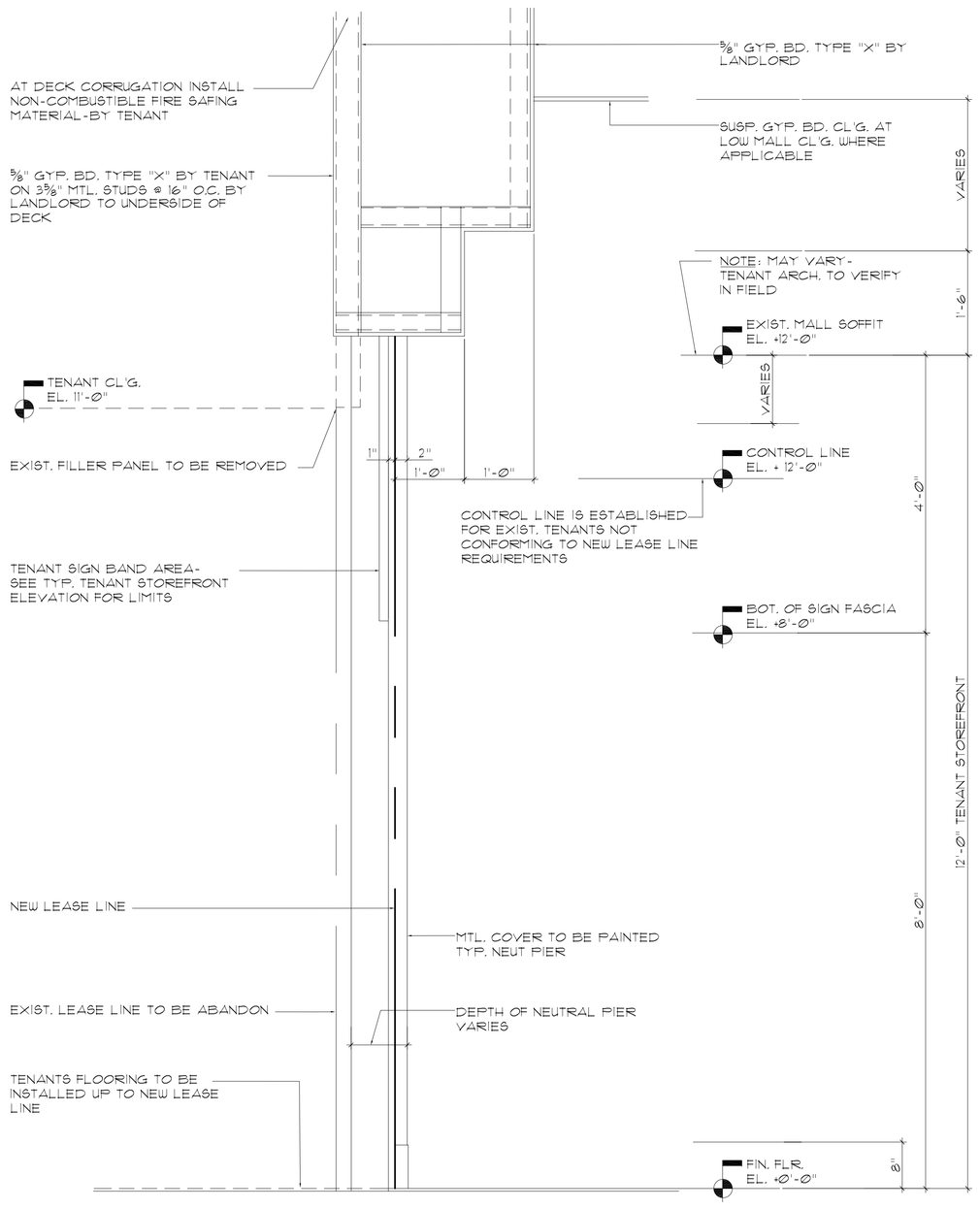


A TD-3R TYPICAL LEASE LINE SECTION
SCALE: 1" = 1'-0"

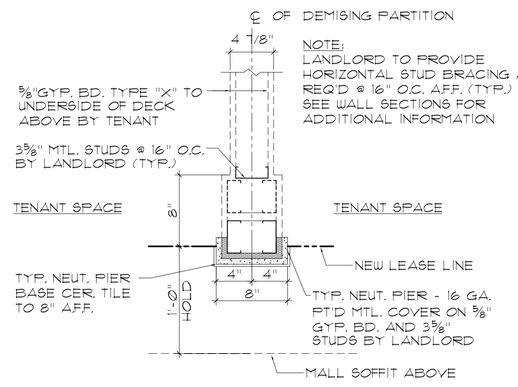


1 TD-3R NEW NEUTRAL PIER PLAN DETAIL
SCALE: 1½" = 1'-0"

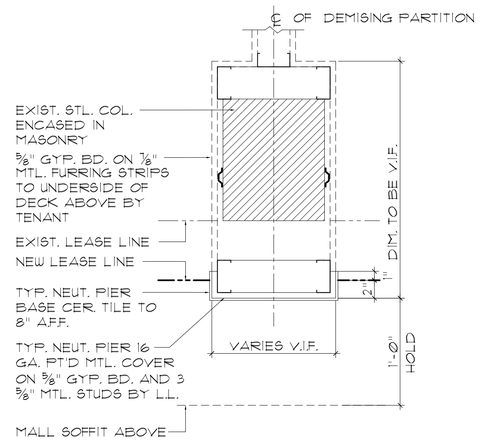


2 TD-3R EXIST. NEUTRAL PIER PLAN DETAIL
SCALE: 1½" = 1'-0"

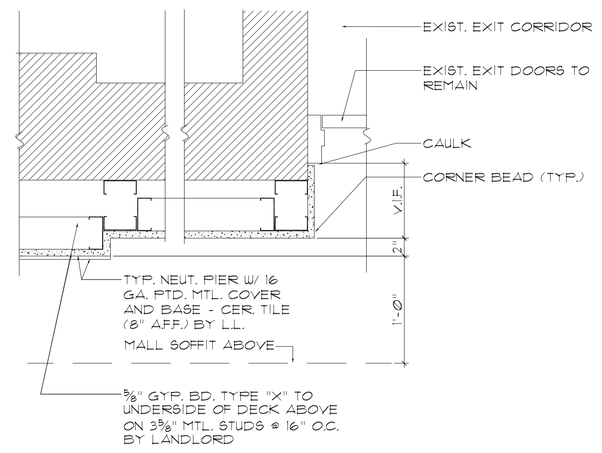


3 TD-3R JAMB DETAIL @ EXIT CORRIDOR
SCALE: 1½" = 1'-0"

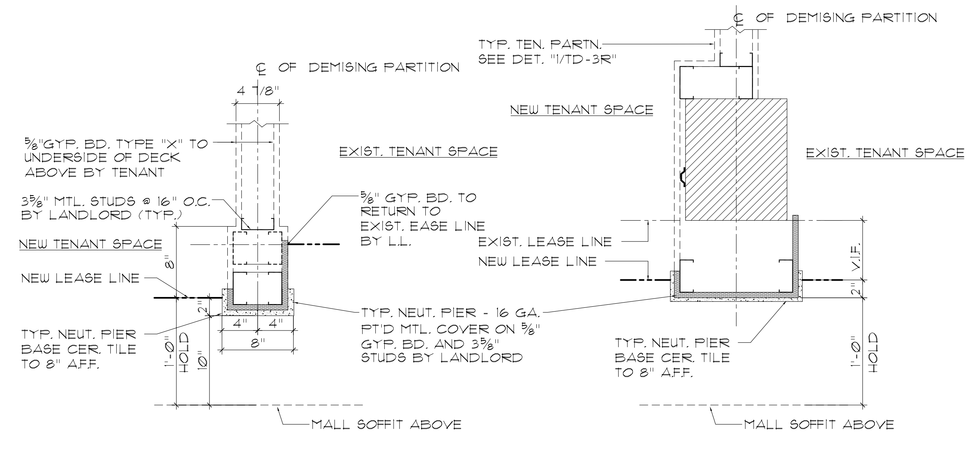


4 TD-3R NEUTRAL PIER
SCALE: 1½" = 1'-0"

5 TD-3R NEUTRAL PIER
SCALE: 1½" = 1'-0"

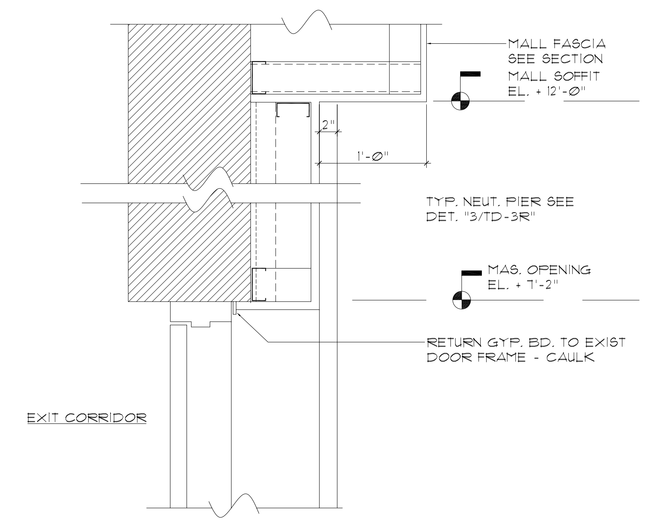


6 TD-3R HEAD DETAIL @ EXIT CORR.
SCALE: 1½" = 1'-0"

REVISIONS:
08-04-05 Updated to Macerich Standards - A.G.G.

LANDLORD NEITHER REPRESENTS NOR WARRANTS THAT THE DIMENSIONS SHOWN ON THIS PLAN WILL OCCUPY SPACE IN THE SHOPPING CENTER EITHER AS SHOWN ON THE PLAN OR OTHERWISE. SQUARE FOOTAGE SHOWN ON THIS PLAN MUST BE VERIFIED PURSUANT TO A DEFINITIVE LEASE DOCUMENT.

The Macerich Company
We Make Shopping Happen
visit our web site at www.macerich.com

SHOPPINGTOWN MALL
DEWITT, NEW YORK

MISC. DETAILS

TD-3R

DATE: 11-13-03
SCALE: AS NOTED
DRAWN BY: KNR

FILE:SHOPPMA_DETAIL