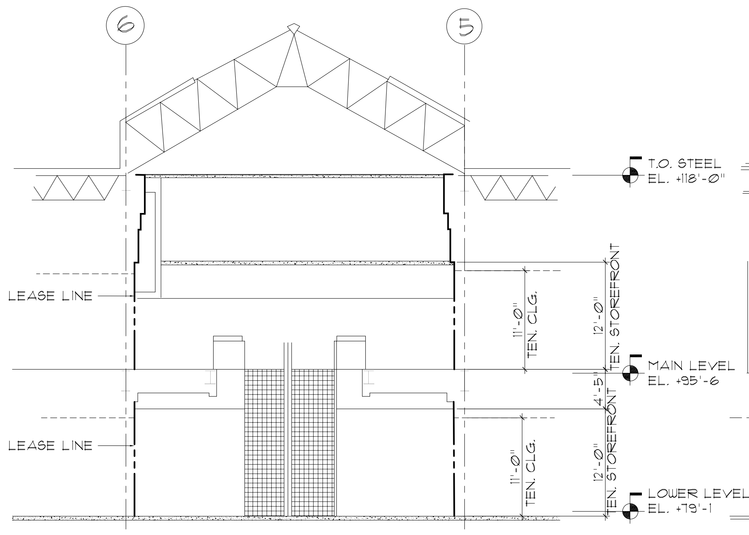

A TD-2 TYPICAL MALL SECTION
SCALE: 1/8" = 1'-0"

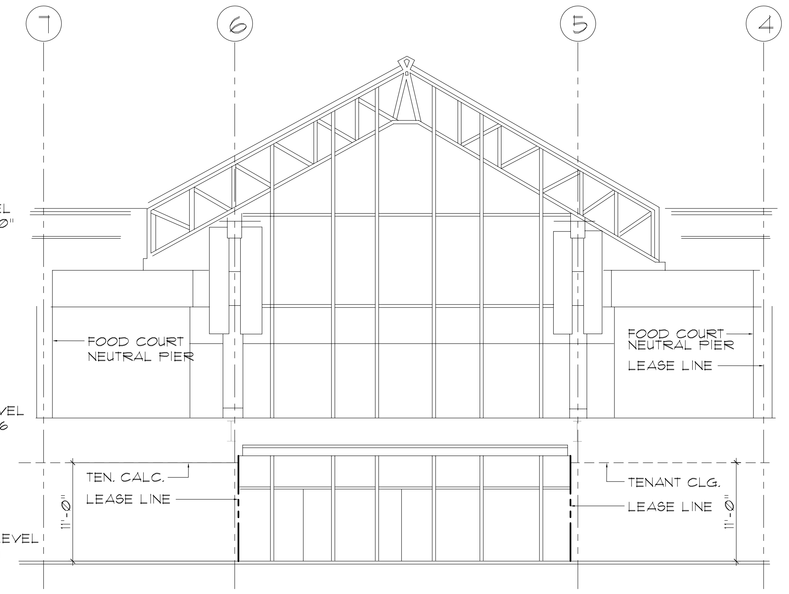

B TD-2 SECTION @ FOOD COURT
SCALE: 1/8" = 1'-0"

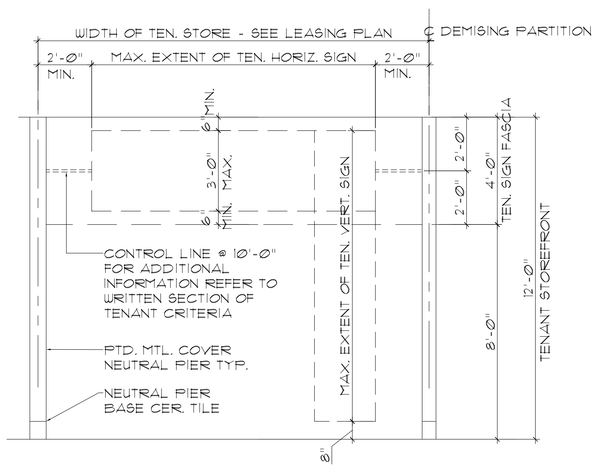

C TD-2 TYPICAL STOREFRONT ELEVATION
SCALE: 1/8" = 1'-0"

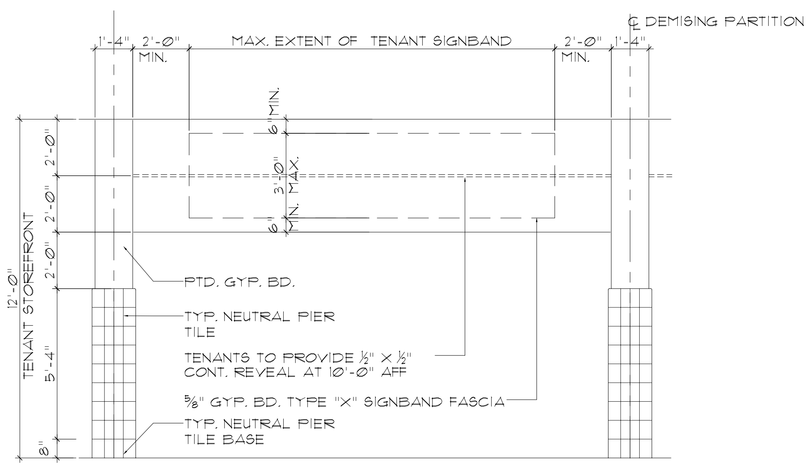

D TD-2 FOOD COURT STOREFRONT ELEVATION
SCALE: 1/8" = 1'-0"

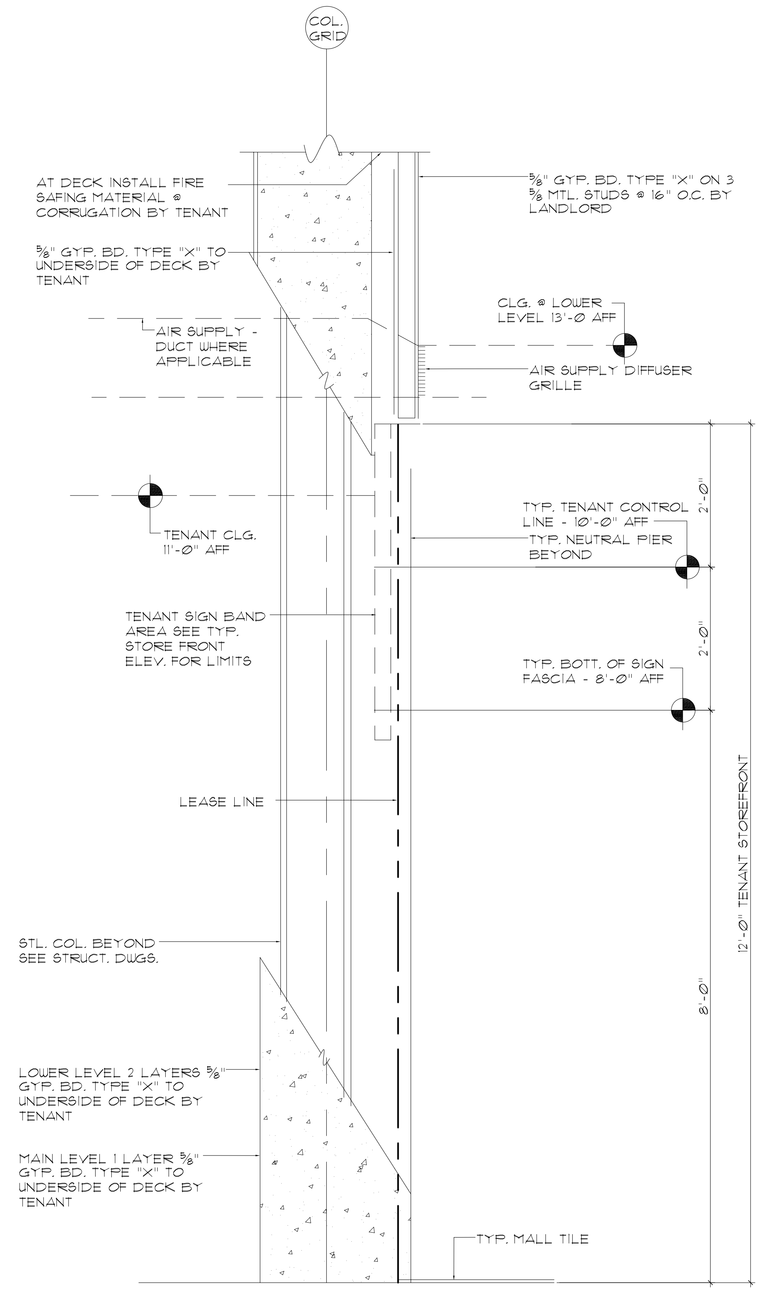

E TD-2 TYPICAL LEASE LINE SECTION
SCALE: 1" = 1'-0"

1. SEE ARCH. DWGS FOR EXACT SIZE & LOCATION OF ALL ROOF OPENINGS. THIS DETAIL TYPICAL FOR ALL OPENINGS GREATER THAN 10" X 10"

2. PROVIDE 5/8" DIA. STEEL BURGLAR BARS @ 6" O.C. EA/ WAY ACROSS OPENING WHERE INDICATED BY ARCH. DWGS. WELD BARS TO ANGLE FRAME.

3. PROVIDE 14 GA. GALVANIZED STEEL SUMP PANS WHERE REQUIRED @ ROOF DRAINS. (SEE ARCH. DWGS. FOR ROOF DRAIN LOCATIONS)

4. WHERE ROOF OPENINGS ARE 10" X 10" OR LESS, PROVIDE 24" X 24" X 16 GA. PLATE, TACK WELDED TO TOP OF DECK, CENTERED ON OPENING.

1 TD-2 TYPICAL ROOF OPENING DET.
SCALE: N.T.S.

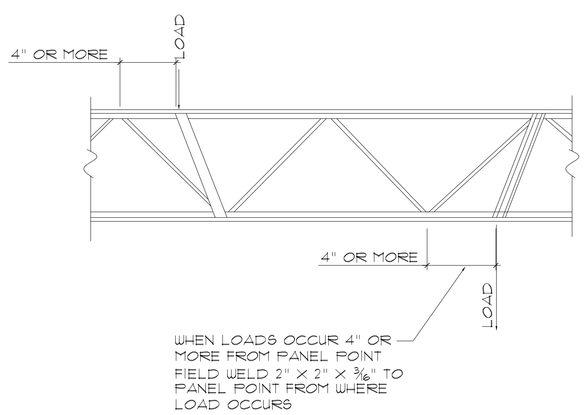

2 TD-2 TYPICAL JOIST REINF. DETAIL
SCALE: N.T.S.

FILE: SHOPPMA_DETAIL

REVISIONS:
08-04-05 Updated to Macerich Standards - A.G.G.

LANDLORD NEITHER REPRESENTS NOR WARRANTS THAT ELEMENTS SHOWN ON THIS PLAN WILL OCCUPY SPACE IN THE SHOPPING CENTER EITHER AS SHOWN OR OTHERWISE. SQUARE FOOTAGES SHOWN OVER-ALL WILL BE VERIFIED PURSUANT TO A DEFINITIVE LEASE DOCUMENT.

The Macerich Company
Vw Aaa Quality Shopping Places
visit our web site at www.macerich.com

SHOPPINGTOWN MALL
DEWITT, NEW YORK

MISC. DETAILS

TD-2

DATE: 11-13-03
SCALE: AS NOTED
DRAWN BY: KNR